EDGE-O-DOCKLEVELER - PP-1572-36

APPROX WEIGHT: 662.26 lbs.
DOES NOT INCLUDE WEIGHT OF POWER OR PACKAGING!!!

*** ANY ADDITIONS, DELETIONS, OR OMISSIONS MUST BE CORRECTED ON THIS DRAWING AS THIS DRAWING WILL BE CONSIDERED ALL INCLUSIVE ***
ALL GRAPHICS PROVIDED ARE FOR REFERENCE ONLY. IF CERTAIN DIMENSIONS ARE CRITICAL PLEASE VERIFY THOSE DIMENSIONS WITH YOUR SALESPERSON

HAND PUMP NOT SHOWN IN FRONT OR RIGHT VIEW

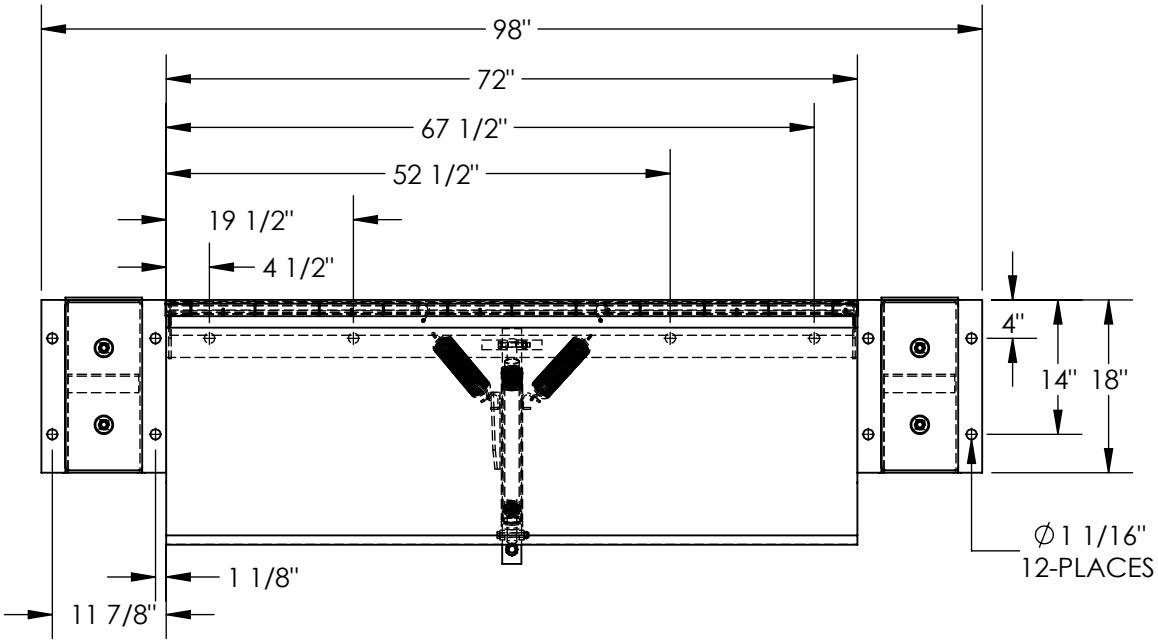

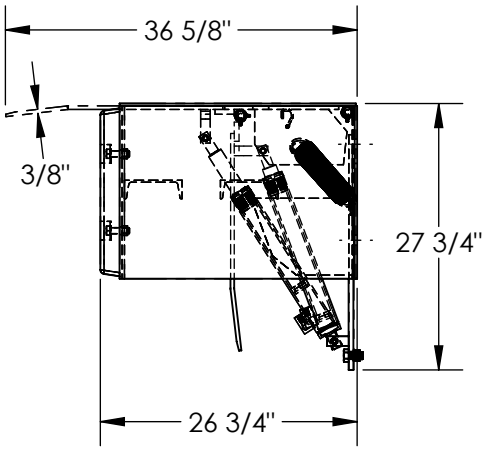

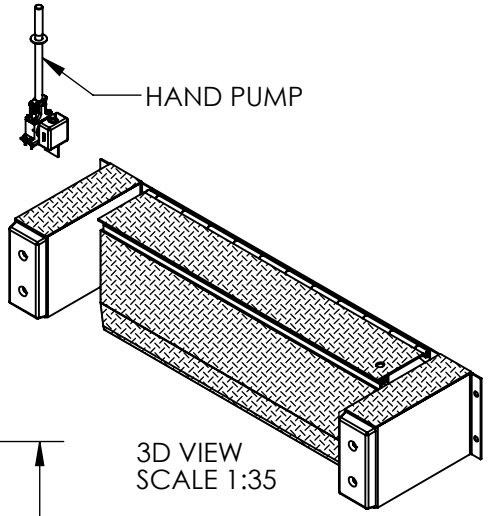

DIMENSION TOLERANCE ± 1/4"

STANDARD FEATURES

MODEL NUMBER IS PP-1572-36
OVERALL WIDTH IS 98"
DECK WIDTH IS 72"
OVERALL DEPTH WITH RAMP OUT IS 36 5/8"
BUMPER PROJECTION IS 26 3/4"
UNIFORM CAPACITY IS 15,000 LBS.
5" ABOVE / 5" BELOW SERVICE RANGE
RECOMMENDED FOR DOCKS AT LEAST 48" HIGH
HYDRAULIC HAND PUMP OPERATION
INCLUDES HAND PUMP, WALL-MOUNT BRACKET, CYLINDER, HYDRAULIC LINES AND OIL.
TREADPLATE RAMP & DECK CONSTRUCTION
DURABLE LIQUID PAINT BROWN FINISH

SPECIAL FEATURES

NONE

APPROVAL

I, THE UNDERSIGNED, AGREE THAT THE PRODUCT AS REPRESENTED SATISFIES DESIGN AND DIMENSION REQUIREMENTS. I ALSO ACKNOWLEDGE MY DUTY TO CONFIRM PRODUCT AND INSTALLATION COMPLIANCE WITH ALL APPLICABLE FEDERAL, STATE AND LOCAL REGULATIONS AND STANDARDS.

UNITS REQUIRING APPROVAL DRAWINGS OR MODIFIED ARE NON-RETURNABLE

[ ] As drawn [ ] As marked

Signed:_____ Date:_____

Printed Name:_____

LEAD TIME WILL START UPON RECEIPT OF SIGNED APPROVAL DRAWING

DISTRIBUTOR'S NAME: HOF Equipment Company		P.O.# X
		W.O.# X
DRAWN BY: M. WILSON	DATE: 1/8/2013	SALES: X
REFERENCE: X	SCALE: 1:20	FILE NAME: 06-007-061
QUOTED LEAD TIME: X	QUOTE # X	